Inspección, Reparación y Mantenimiento

Todo transportista, sus funcionarios, choferes, agentes, representantes y empleados directamente relacionados con la inspección o mantenimiento de vehículos motorizados comerciales deben cumplir y conocer estas reglas.

Requisitos generales

Todo transportista sistemáticamente inspeccionará, reparará y mantendrá todos los vehículos motorizados comerciales que estén bajo su control.

Requisitos para el mantenimiento de registros

Los transportistas deben mantener la información siguiente en relación con cada vehículo que hayan tenido bajo su control por 30 días o más:

- Datos identificadores, incluyendo el número asignado por la compañía, la marca, el número de serie, el año y el tamaño de las llantas
- Un programa de inspecciones, incluyendo el tipo y fechas
- Registros de inspecciones, reparaciones y mantenimiento
- Registros de pruebas realizadas en ómnibus con ventanas de empujar para salir, puertas de emergencia y luces de marcación.

Estos registros se deben retener durante un año en el lugar donde se guarda el vehículo, y mantener durante seis meses después que el vehículo deje de estar fuera del control del transportista (ya sea por venta, entregado a cambio o como chatarra).

Informes de inspecciones en el camino

Todo chofer que reciba un informe de inspección en el camino debe entregárselo al transportista.

Certificación de informes de inspecciones en el camino

Un funcionario del transportista examinará los informes de inspecciones en el camino para asegurarse que se corrijan las infracciones o defectos indicados en ellos. Dentro de los 15 días siguientes a la inspección, el transportista debe firmar el informe de inspección en el camino debidamente llenado para certificar que se han corregido todas las infracciones, y después devolverlo a la dirección indicada. Se debe guardar una copia durante 12 meses a partir de la fecha de la inspección.

Informe de inspección después de cada viaje

Todo transportista debe pedirle a sus choferes que, al final de cada día manejando, preparen un informe diario de inspección después de cada viaje. Cada chofer es responsable de preparar dicho informe por cada vehículo manejado. Este informe debe abarcar *por lo menos* las siguientes piezas y accesorios:

- Frenos de servicio (incluyendo las conexiones de frenos del tráiler)
- Freno de estacionamiento (de mano)
- Mecanismo de dirección
- Luces y reflectores
- Llantas
- Bocina
- Limpiadores de parabrisas
- Espejos retrovisores
- Dispositivos de acoplamiento
- Llantas y rines
- Equipo para emergencias.

El informe debe incluir todas las condiciones que el chofer encontró o que le hayan sido reportadas y que podrían afectar la seguridad de sus operaciones o causar una avería. Si no se reporta o encuentra ningún defecto, esto se debe indicar en el reporte. El chofer debe firmar el reporte en todos los casos. El transportista debe asegurarse que se ha hecho una certificación con respecto a cualquier defecto o deficiencia, que éste ha sido corregido, o indicar las deficiencias que no haya que corregir inmediatamente. Los transportistas deben guardar el informe original de inspección después de los viajes y la certificación de las reparaciones por un mínimo de tres meses a partir de la fecha de su preparación.

Antes de comenzar a trabajar, el chofer debe estar satisfecho de que el vehículo está en condiciones seguras de funcionamiento. Si el último informe de inspección del vehículo indica alguna deficiencia, el chofer debe revisarla y firmar para confirmar que se han hecho las reparaciones necesarias.

Inspecciones periódicas

Todo vehículo comercial, incluyendo cada segmento de un vehículo combinado, requiere una inspección periódica que se debe hacer por lo menos una vez cada 12 meses. Como mínimo, las inspecciones deben incluir todos los puntos enumerados en las Normas Mínimas de Inspecciones Periódicas, Apéndice G al Subcapítulo B. Los transportistas pueden hacer ellos mismos las inspecciones anuales requeridas. El original o una copia del informe de inspección periódica debe guardarlo el transportista durante 14 meses a partir de la fecha del informe.

Documentación de inspecciones

La documentación (informe, calcomanía o etiqueta) de la inspección periódica más reciente se debe guardar en el vehículo.

Calificación de inspectores

Los transportistas deben asegurarse que las personas que hacen las inspecciones anuales estén calificadas. Los inspectores deben:

- entender las normas de inspección indicadas en la Parte 393 y el Apéndice G
- poder identificar componentes defectuosos
- poseer conocimientos y dominar los métodos, procedimientos y herramientas.

Capacitación o experiencia de los inspectores

Los inspectores deben haber adquirido experiencia o capacitación en la forma siguiente:

- terminando un programa de capacitación del gobierno federal o de un gobierno estatal, o tener un certificado de un estado o de una provincia canadiense que lo califique para hacer inspecciones de seguridad de vehículos motorizados comerciales
- una combinación de capacitación o experiencia por un total de un año, como mínimo.

Prueba de las calificaciones

Los transportistas deben guardar la prueba de las calificaciones del inspector hasta un año después que éste deje de hacer inspecciones.

Equivalente de inspecciones periódicas

El transportista debe cumplir con los requisitos de inspección periódica por medio de:

- Un programa de inspecciones en el camino, ya sea estatal o de otra jurisdicción;
- Auto-inspecciones por empleados calificados; o
- Inspecciones por un tercero calificado.

Calificación de inspectores de frenos

El transportista es responsable de asegurar que todas las inspecciones, mantenimiento, reparaciones y servicio de frenos de vehículos motorizados comerciales cumplan con estas regulaciones. El transportista debe asegurarse que todos los empleados encargados de hacer inspecciones, mantenimiento, servicio o reparación de frenos cumplan con las calificaciones mínimas de los inspectores de frenos.

Calificaciones de los inspectores de frenos

El inspector de frenos debe:

- entender y poder hacer la inspección y dar servicio a los frenos;
- conocer los métodos, procedimientos, herramientas y equipos necesarios; y
- estar calificado para dar servicio a los frenos o inspeccionarlos, ya sea mediante capacitación y/o experiencia.

Capacitación o experiencia para la calificación en frenos

La capacitación o experiencia para la calificación en frenos incluye la conclusión exitosa de:

- un programa de capacitación de un estado, provincia canadiense, agencia federal o sindicato,
- un programa de capacitación aprobado por un estado,
- capacitación que culmine en la obtención de un certificado de calificación de un estado o provincia canadiense para dar servicio o hacer inspecciones asignadas de frenos, incluyendo pasar la prueba de frenos de aire de la licencia de conductor comercial en el caso de una inspección de frenos, o
- un año de capacitación, de experiencia o una combinación de ambas cosas, en relación con frenos.

Mantenimiento de las pruebas de calificación del inspector de frenos

Los transportistas deben tener prueba de la calificación de los inspectores de frenos en el lugar principal del negocio o en el sitio donde trabaja el inspector. La prueba se debe guardar todo el tiempo que el inspector de frenos esté empleado en esa capacidad, y por un año de ahí en adelante.

Driver's Vehicle Inspection Report

Check Any Defective Item and Give Details Under "Remarks."

DATE: _____

TRUCK/TRACTOR NO. _____

- ☐ Air Compressor
- ☐ Air Lines
- ☐ Battery
- ☐ Brake Accessories
- ☐ Brakes
- ☐ Carburetor
- ☐ Clutch
- ☐ Defroster
- ☐ Drive Line
- ☐ Engine
- ☐ Fifth Wheel
- ☐ Front Axle
- ☐ Fuel Tanks
- ☐ Heater
- ☐ Horn
- ☐ Lights
  - Head – Stop
  - Tail – Dash
  - Turn Indicators
- ☐ Mirrors
- ☐ Muffler
- ☐ Oil Pressure
- ☐ On-Board Recorder
- ☐ Radiator
- ☐ Rear End
- ☐ Reflectors
- ☐ Safety Equipment
  - Fire Extinguisher
  - Flags-Flares-Fusees
  - Spare Bulbs & Fuses
  - Spare Seal Beam
- ☐ Springs
- ☐ Starter
- ☐ Steering
- ☐ Tachograph
- ☐ Tires
- ☐ Transmission
- ☐ Wheels
- ☐ Windows
- ☐ Windshield Wipers
- ☐ Other

TRAILER(S) NO.(S) _____

- ☐ Brake Connections
- ☐ Brakes
- ☐ Coupling Chains
- ☐ Coupling (King) Pin
- ☐ Doors
- ☐ Hitch
- ☐ Landing Gear
- ☐ Lights – All
- ☐ Roof
- ☐ Springs
- ☐ Tarpaulin
- ☐ Tires
- ☐ Wheels
- ☐ Other

Remarks: _____

_____

_____

_____

_____

_____

_____

_____

☐ CONDITION OF THE ABOVE VEHICLE IS SATISFACTORY

DRIVER'S SIGNATURE _____

☐ ABOVE DEFECTS CORRECTED

☐ ABOVE DEFECTS NEED NOT BE CORRECTED FOR SAFE OPERATION OF VEHICLE

MECHANIC'S SIGNATURE _____ DATE _____

DRIVER'S SIGNATURE _____ DATE _____

Vehicle Service Due Status Report

VEHICLE IDENTIFICATION

MAKE	SERIAL NUMBER
YEAR	TIRE SIZE
COMPANY NUMBER/OTHER I.D.	OWNER, IF LEASED

DATE OF INSPECTION	TYPE OF INSPECTION	MILEAGE AT TIME OF INSPECTION	DATE NEXT INSPECTION DUE	MILEAGE TYPE OF INSPECTION DUE	INSPECTION DUE

NORTH AMERICAN STANDARD INSPECTION PROCEDURE

1. PREPARE THE VEHICLE AND DRIVER

Instruct the driver to remain at the controls, and turn the engine off. (Allow cool down time for turbo-charged engines.)

Place chock blocks in position beginning on the driver's side, one in front and one behind the drive axle tires or between the axles, and advise the driver that the wheels have been chocked.

Have the driver place the transmission in neutral and release all brakes.

Advise the driver in the use of hand signals. (Lamps and brakes)

2. CHECK DRIVER'S REQUIREMENTS

- DRIVER LICENSE (391.11)
  Check for expiration date, birth date, status check.
- MEDICAL CERTIFICATE (391.41)
  Check for expiration date, corrective lenses, hearing aid, signatures.
- MEDICAL WAIVER (If applicable) (391.49)
  Check for expiration date, and make sure form is completed. Note the stated physical limitations.
- RECORD OF DUTY STATUS (395.8) (395.3)
  Updated to last change of duty status, today's date, legible handwriting, past 7 days recorded, mileage, driving time, on duty time, vehicle numbers, carrier name, signature.
  "Remarks" section may include locations of duty status change, unusual circumstances that delay the trip, and shipping document numbers or the name of the shipper. Check for written authorization for interactive electronic recording devices, if applicable
- DRIVER VEHICLE INSPECTION REPORT (396.11)
  Check for I.D. number of vehicle(s) inspected, record of defects found (if any), and signatures.
- SHIPPING PAPERS/BILL OF LADING
  Check for listings of hazardous materials indicated by the first entry, an "X" in the H.M. column, or a contrasting color. Papers must be within arm's reach and visible.
- SEAT BELT (392.16)
  Check for condition and usage
- ALCOHOL AND DRUGS (392.4) (392.5)
  Check for violations

3. CHECK FOR PRESENCE OF HAZARDOUS MATERIALS

- PLACARDS
  Check for the presence of placards, but use caution even if none are posted.
- LEAKS, SPILLS, UNSECURE CARGO
  When hazardous materials are present, be ESPECIALLY careful with leaks, spills, or unsecure cargo.
- MARKINGS
  Cargo tanks and portable tanks will display markings on an orange panel or placard. They indicate the I.D. number the hazardous materials. There are exceptions to this rule.
- LABELS
  When containers are visible, labels will identify the hazardous materials. There are exceptions to this rule.

4. INSIDE CAB

- STEERING LASH
  Measure amount of steering lash and compare with Out-of-Service Criteria.
- STEERING COLUMN
  Check for unsecure attachment.

5. FRONT OF TRACTOR

- HEAD LAMPS, TURN SIGNALS, EMERGENCY FLASHERS (393.25)
  Check for improper color and operation.
- WINDSHIELD WIPERS (393.78)
  Check for improper operation. Two wipers are required unless one can clean the driver's field of vision.
- WINDSHIELD (393.60)
  Check for cracks or other damage. Check for decals or stickers in field of vision.

6. STEERING AXLE

INFORM THE DRIVER THAT YOU ARE GOING UNDER THE VEHICLE, AND TO LISTEN FOR YOUR INSTRUCTIONS.

- STEERING SYSTEM (BOTH SIDES)
  Check for loose, worn, bent, damaged or missing parts. Instruct the driver to rock the steering wheel, and check key components: front axle beam, gear box, pitman arm, drag link, tie rod, tie rod ends.
- FRONT SUSPENSION (BOTH SIDES)
  Check for indications of misaligned, shifted, or cracked springs, loosened shackles, missing bolts, spring hangers unsecure at frame, and cracked or loose U-bolts.
  Also, check for unsecure axle positioning parts and signs of axle misalignment

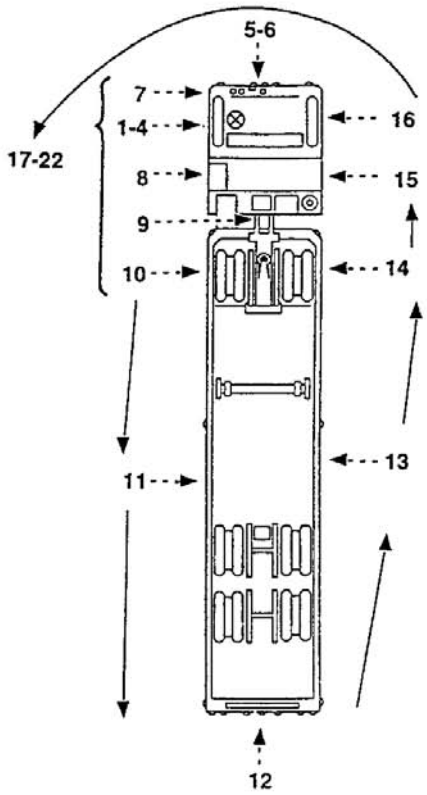

- FRONT BRAKES (BOTH SIDES) (393.48)
  Check for missing, nonfunctioning, loose, contaminated, or cracked parts on the brake system, such as brake drum, shoes, rotors, pads, linings, brake chamber, chamber mounting, push rods, slack adjusters.
  Check for "S" cam flip over. Be alert for audible air leaks around brake components and lines.
  With the brakes released, mark the brake chamber push rod at a point where the push rod exits the brake chamber. Mark the push rods on both sides at this time; all push rods will be measured in ITEM 18.
- FRONT AXLE
  Check for cracks, welds, and obvious misalignment.
- FRAME and FRAME ASSEMBLY
  Check for cracks, or any defect that may lead to the collapse of the frame.

7. LEFT FRONT SIDE OF TRACTOR

- LEFT FRONT WHEEL & RIM
  Check for cracks, unseated locking rings, broken or missing lugs, studs or clamps. Bent or cracked rims, "bleeding" rust stains, loose or damaged lug nuts and elongated stud holes.
- LEFT FRONT TIRE (393.75)
  Check for improper inflation, serious cuts, bulges. Check tread wear and measure major tread groove depth. Inspect sidewall for defects. Check for exposed fabric or cord. Radial and bias tires should not be mixed on the steering axle.

8. LEFT SADDLE TANK AREA

- LEFT FUEL TANK(S) (393.65)
  Check for unsecure mounting, leaks or other damage. Verify that the fuel crossover line is secure. Check for unsecure cap(s).
  Check ground below tank for signs of leaking fuel.
- TRACTOR FRAME (393.201)
  Check frame rails and cross members on the tractor just behind the cab, looking for cracks, bends, or excessive corrosion.
- EXHAUST SYSTEM (393.83)
  Check for unsecure mounting, leaks (under the cab), exhaust contacted by fuel or air lines or electrical wires.
  Check for carbon deposits around seams and clamps.

9. TRAILER FRONT

- AIR & ELECTRICAL LINES (393.28)
  Lines between tractor and trailer should be suspended and free of tangles and crimps. They should have sufficient slack to allow the vehicle to turn. Inspect line connections for proper seating. Listen for audible air leaks.
- FRONT END PROTECTION (393.106)
  Check for height requirements. (Note exceptions.)

10. LEFT REAR TRACTOR AREA

- WHEELS, RIMS & TIRES
  Inspect as described in ITEM 7.
  Check inside tire of dual for inflation and general condition. Tires should be evenly matched (same circumference) on dual wheels.
  Without placing yourself between the tires on tandem axles, check for debris between the tires.
- LOWER FIFTH WHEEL (393.70)
  Check for unsecure mounting to the frame or any missing or damaged parts.
  Check for any visible space between the upper and lower fifth wheel plates.
  Verify that the locking jaws are around the shank and not the head of the kingpin. Verify that the release lever is seated properly, and that the safety latch is engaged.
- UPPER FIFTH WHEEL
  Check for any damage to the weight bearing plate and its supports on the trailer. Check kingpin condition.
- SLIDING FIFTH WHEEL
  Check for proper engagement of locking mechanism (teeth fully engaged on rail). Check for worn or missing parts, making sure that the position does not allow the tractor frame rails to contact the landing gear during turns.

INFORM THE DRIVER THAT YOU ARE GOING UNDER THE VEHICLE. ENTER THE UNDERCARRIAGE IN VIEW OF THE DRIVER.

- SUSPENSION (BOTH SIDES)
  Inspect as described in ITEM 6. Check for deflated or leaking air suspension systems.
- BRAKES (BOTH SIDES)
  Inspect brakes as described in ITEM 6.
  With brakes released, mark the push rods.

11. LEFT SIDE OF TRAILER

- FRAME AND BODY
  Check for cracks and any indication leading to collapse of the frame.
- CARGO SECUREMENT (393.100)
  Check for improper blocking or bracing, and unsecure chains or straps. Verify end gates are secured in stake pockets. Check tarp or canvas.
- WHEELS, RIMS, & TIRES
  Inspect as described in ITEM 7.
- SLIDING TANDEM
  Check for misalignment and position. Look for damaged, worn, or missing parts. Check locking mechanism, teeth of locking mechanism must fully mesh with those of the rail secured to the frame.

INFORM THE DRIVER THAT YOU ARE GOING UNDER THE VEHICLE. ENTER THE UNDERCARRIAGE IN VIEW OF THE DRIVER.

- SUSPENSION (BOTH SIDES)
  Inspect as described in ITEM 6.
- BRAKES (BOTH SIDES)
  Inspect as described in ITEM 6. With brakes released, mark push rods.

12. REAR OF TRAILER

- TAIL, STOP, & TURN LAMPS & EMERGENCY FLASHERS
  Check for improper color and operation.
- CARGO SECUREMENT
  Inspect as described in ITEM 11.
  Also check tailboard security. Verify end gates are secured in stake pockets, and rear doors are closed. Check both sides of trailer to insure protection of cargo from shifting or falling

13. RIGHT SIDE OF TRAILER

- CHECK ALL ITEMS AS ON LEFT SIDE.

14. RIGHT REAR TRACTOR AREA

- CHECK ALL ITEMS AS ON LEFT SIDE.

15. RIGHT SADDLE TANK AREA

- CHECK ALL ITEMS AS ON LEFT SIDE.

16. RIGHT FRONT SIDE OF TRACTOR

- CHECK ALL ITEMS AS ON LEFT SIDE.

17. BRAKE ADJUSTMENT CHECK

INFORM THE DRIVER THAT YOU ARE GOING UNDER THE VEHICLE. ENTER THE UNDERCARRIAGE IN VIEW OF THE DRIVER.

- MEASURE PUSH ROD TRAVEL (ALL BRAKES)
  While the brakes are applied, move around the vehicle and measure the distance of push rod travel at each chamber.
  Write down each push rod measurement, and compare them to the Out-of-Service Criteria for the appropriate size and type of brake chamber.
  Again, listen for leaks as you move around the vehicle.

18. FIFTH WHEEL MOVEMENT CHECK

- USE CAUTION
  If conducted improperly, this method of checking for fifth wheel movement can result in serious damage to the vehicle. Use caution and instruct the driver carefully.
- PREPARE THE VEHICLE AND DRIVER
  Have the driver put the vehicle in gear, release the service brakes, and apply the trailer brakes.
  Remove the wheel chocks and have the driver start the vehicle. Carefully explain the procedure to the driver. Tell the driver to GENTLY rock the tractor as you watch the fifth wheel.
- CONDUCT THE PROCEDURE
  As the tractor rocks, watch for movement between the mounting components and frame, pivot pin, and bracket, and the upper and lower fifth wheel halves.

19. AIR LOSS RATE

- WHEN TO CONDUCT THE TEST
  If you heard an air leak at any point in the inspection, you should now check the vehicle's air loss rate.
- CONDUCT THE PROCEDURE
  Have the driver run the engine at idle, then apply and hold the service brake.
  Observe the air reservoir pressure gauge on the dash.
  Have driver pump the pressure down to 80 psi. Compressors do not activate until system pressure drops below a certain level. At about 80 lbs. most compressors should be operating.

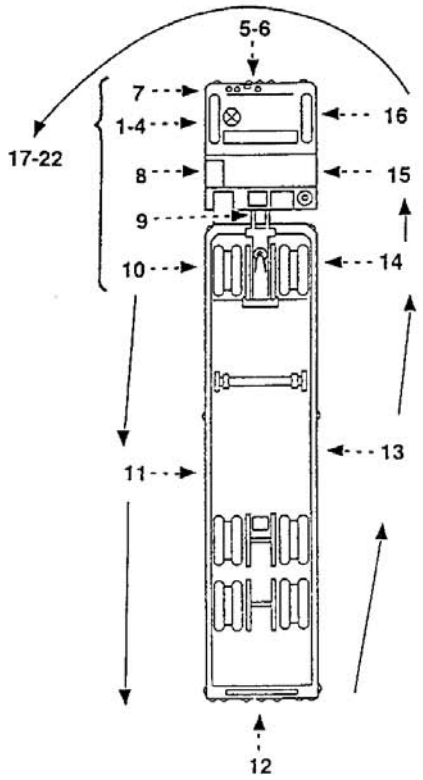

Air pressure should be maintained or increase. A drop in pressure indicates a serious air leak in the brake system, and the vehicle should be placed out of service.

20. LOW AIR PRESSURE WARNING DEVICE

- TEST THE WARNING DEVICE
  Instruct the driver to pump the air down until the low air pressure warning device activates.
  Observe the gauges on the dash. The low air pressure warning must activate at a minimum of 1/2 the compressor governor cut out pressure, approximately 55 psi.

21. TRACTOR PROTECTION VALVE

This procedure will test both the tractor protection valve and the trailer emergency brakes.

- CONDUCT THE TEST
  Instruct the driver to release the emergency brakes by pushing in the dash valves.
  Break the supply emergency line at the hose couplers between the tractor and the trailer. When the line is disconnected, a blast of air will be noticed. At this point, the emergency brakes on the trailer should set up.
- OBSERVE THE DASH GAUGE
  Air will leak from the tractor side of the line until the pressure in the tractor's system drops to the 20-45 psi range. At that point, the air loss should stop, isolating the tractor air system.
  A loss of air in the tractor system below the 20-45 psi range indicates a malfunctioning tractor protection valve.
  If the trailer brakes do not set up when the line is disconnected, there is a problem with the trailer emergency brakes.

22. COMPLETE THE INSPECTION

- COMPLETE PAPER WORK
  Complete inspection forms and other paperwork, as required.
- CONCLUDE WITH THE DRIVER
  Explain any violations or warnings to the driver. Take appropriate enforcement action, if necessary.
- APPLY C.V.S.A. DECAL
  Apply a C.V.S.A. decal on all vehicles that qualify.

Differences in the Levels of Inspection

Inspection Items	Level I	Level II*	Level III	Level IV	Level V**
1. Drivers License	✔	✔	✔		
2. Medical examiner's certificate and waiver (if applicable)	✔	✔	✔		
3. Alcohol and drugs	✔	✔	✔		
4. Drivers log (hours-of-service and duty status)	✔	✔	✔		
5. Seatbelt system	✔	✔	✔		✔
6. Periodic inspection documentation	✔	✔	✔		✔
7. Brake system	✔	✔			✔
8. Coupling devices	✔	✔			✔
9. Exhaust system	✔	✔			✔
10. Frame	✔	✔			✔
11. Fuel system	✔	✔			✔
12. Brake, head, tail lamps, turn signals, and lamps on projecting loads	✔	✔			✔
13. Safe loading of cargo	✔	✔			✔
14. Steering mechanism	✔	✔			✔
15. Suspension	✔	✔			✔
16. Tires	✔	✔			✔
17. Wheels, rims and hubs	✔	✔			✔
18. Van and open top trailer bodies	✔	✔			✔
19. Windshield wipers	✔	✔			✔
20. Emergency exits (for buses)	✔	✔			✔
21. Hazardous materials requirements (as applicable)	✔	✔	✔		✔
22. One time special inspection of a particular item				✔	
CVSA decal issued for "Pass" inspection (no violations/defects found in items 7-20)	✔				✔

Notes:

* Level II inspections only include those items that can be inspected without physically getting under the vehicle

** Level V inspections are conducted without a driver present

Inspection, Repair & Maintenance Record

VEHICLE IDENTIFICATION

MAKE	SERIAL NUMBER
YEAR	TIRE SIZE
COMPANY NUMBER/OTHER I.D.	OWNER, IF LEASED

DATE	OPERATION PERFORMED, INSPECTION AND/OR REPAIR

ANNUAL VEHICLE INSPECTION REPORT

VEHICLE HISTORY RECORD	
REPORT NUMBER	FLEET UNIT NUMBER
DATE	

MOTOR CARRIER OPERATOR	INSPECTOR'S NAME (PRINT OR TYPE)
ADDRESS	THIS INSPECTOR MEETS THE QUALIFICATION REQUIREMENTS IN SECTION 396.19. ☐ YES
CITY, STATE, ZIP CODE	VEHICLE IDENTIFICATION (✓) AND COMPLETE ☐ LIC. PLATE NO. ☐ VIN ☐ OTHER
VEHICLE TYPE ☐ TRACTOR ☐ TRAILER ☐ TRUCK ☐ (OTHER)	INSPECTION AGENCY/LOCATION (OPTIONAL)

VEHICLE COMPONENTS INSPECTED

OK	NEEDS REPAIR	REPAIRED DATE	ITEM
			1. BRAKE SYSTEM
			a. Service Brakes
			b. Parking Brake System
			c. Brake Drums or Rotors
			d. Brake Hose
			e. Brake Tubing
			f. Low Pressure Warning Device
			g. Tractor Protection Valve
			h. Air Compressor
			i. Electric Brakes
			j. Hydraulic Brakes
			k. Vacuum Systems
			2. COUPLING DEVICES
			a. Fifth Wheels
			b. Pintle Hooks
			c. Drawbar/Towbar Eye
			d. Drawbar/Towbar Tongue
			e. Safety Devices
			f. Saddle-Mounts
			3. EXHAUST SYSTEM
			a. Any exhaust system determined to be leaking at a point forward of or directly below the driver/sleeper compartment.
			b. A bus exhaust system leaking or discharging to the atmosphere in violation of standards (1), (2) or (3).
			c. No part of the exhaust system of any motor vehicle shall be so located as would be likely to result in burning, charring, or damaging the electrical wiring, the fuel supply, or any combustible part of the motor vehicle.

OK	NEEDS REPAIR	REPAIRED DATE	ITEM
			4. FUEL SYSTEM
			a. Visible leak
			b. Fuel tank filler cap missing
			c. Fuel tank securely attached
			5. LIGHTING DEVICES All lighting devices and reflectors required by Section 393 shall be operable.
			6. SAFE LOADING
			a. Part(s) of vehicle or condition of loading such that the spare tire or any part of the load or dunnage can fall onto the roadway.
			b. Protection against shifting cargo
			7. STEERING MECHANISM
			a. Steering Wheel Free Play
			b. Steering Column
			c. Front Axle Beam and All Steering Components Other Than Steering Column
			d. Steering Gear Box
			e. Pitman Arm
			f. Power Steering
			g. Ball and Socket Joints
			h. Tie Rods and Drag Links
			i. Nuts
			j. Steering System
			8. SUSPENSION
			a. Any U-bolt(s), spring hanger(s), or other axle positioning part(s) cracked, broken, loose or missing resulting in shifting of an axle from its normal position.
			b. Spring Assembly
			c. Torque, Radius or Tracking Components.

OK	NEEDS REPAIR	REPAIRED DATE	ITEM
			9. FRAME
			a. Frame Members
			b. Tire and Wheel Clearance
			c. Adjustable Axle Assemblies (Sliding Subframes)
			10. TIRES
			a. Tires on any steering axle of a power unit.
			b. All other tires.
			11. WHEELS AND RIMS
			a. Lock or Side Ring
			b. Wheels and Rims
			c. Fasteners
			d. Welds
			12. WINDSHIELD GLAZING Requirements and exceptions as stated pertaining to any crack, discoloration or vision reducing matter (reference 393.60 for exceptions)
			13. WINDSHIELD WIPERS Any power unit that has an inoperative wiper, or missing or damaged parts that render it ineffective.
			List any other condition which may prevent safe operation of this vehicle.

INSTRUCTIONS: MARK COLUMN ENTRIES TO VERIFY INSPECTION: __X__ OK, __X__ NEEDS REPAIR, __NA__ IF ITEMS DO NOT APPLY, _____ REPAIRED DATE

CERTIFICATION: THIS VEHICLE HAS PASSED ALL THE INSPECTION ITEMS FOR THE ANNUAL VEHICLE INSPECTION REPORT IN ACCORDANCE WITH 49 CFR 396.

© Copyright 1994 & Published by J. J. KELLER & ASSOCIATES, INC.• Neenah, WI 54957-0368
PRINTED IN THE U.S.A.

200-FS-C3
Rev. 3/94

ORIGINAL

INSPECTOR QUALIFICATIONS

Certification — 49 CFR — Part 396.19

Motor carriers are responsible for ensuring that individual(s) performing an annual inspection under 396.19 are qualified as follows:

- ❑ Understands the inspection criteria set forth in Part 393 and Appendix G and can identify defective components
- ❑ Is knowledgeable of and has mastered the methods, procedures, tools and equipment used when performing an inspection
- ❑ Is capable of performing an inspection by reason of experience, training, or both, and qualifies in one of the following categories (check all that apply):

  I. ❑ Successfully completed a State or Federal training program or has certificate from a State or Canadian Province which qualifies the person to perform commercial vehicle safety inspections. Specify:

  _____

  or

  II. ❑ Have a combination of training or experience totaling at least one year as follows (check all that apply):

  A. ❑ Participation in a truck manufacturer-sponsored training program or similar commercial training program designed to train students in truck operation and maintenance. Where and Date:

  _____

  B. ❑ ____ (years) experience as a mechanic or inspector in a motor carrier maintenance program. Name and Date:

  _____

  C. ❑ ____ (years) experience as a mechanic or inspector in truck maintenance at a commercial garage, fleet leasing company, or similar facility. Name of Facility and Dates:

  _____

  D. ❑ ____ (years) experience as a commercial vehicle inspector for a State, Provincial, or Federal Government. Where and Dates:

  _____

I certify the above information is true and accurate to the best of my knowledge.

Employee _____ _____

Signature of Mechanic/Inspector Date

Motor Carrier/Company _____ _____

Signature of Employer/Supervisor Date

Evidence of Inspector Qualifications are on file at:

_____

BRAKE INSPECTOR QUALIFICATIONS

Certification — 49 CFR — Part 396.25

"Brake Inspector" means any employee of a motor carrier who is responsible for ensuring all brake inspections, maintenance, service, or repairs to any commercial motor vehicle, subject to the motor carrier's control, meet the applicable Federal standards.

No motor carrier shall require or permit any employee who does not meet minimum brake inspector qualifications to be responsible for the inspection, maintenance, service or repairs of any brakes on its commercial motor vehicles.

Minimum Qualifications

- ❑ Understands and can perform brake service and inspection
- ❑ Is knowledgeable of and has mastered the methods, procedures, tools and equipment necessary to perform brake service and inspection
- ❑ Is capable of performing brake service or inspection by reason of experience, training, or both, and qualifies in one of the following categories (check all that apply):

  I. ❑ Has successfully completed an apprenticeship program sponsored or approved by a State, Canadian Province, a Federal agency or labor union, or has a certificate from a State or Canadian Province which qualifies the person to perform brake service or inspections. Specify:

  _____

  or

  II. ❑ Has brake-related training or experience or a combination thereof totaling at least one year as follows (check all that apply):

  A. ❑ Participation in a brake maintenance or inspection training program sponsored by a brake or vehicle manufacturer or similar commercial training program. Where and Date:

  _____

  B. ❑ ____ (years) experience performing brake maintenance or inspection in a motor carrier maintenance program. Name and Date:

  _____

  C. ❑ ____ (years) experience performing brake maintenance or inspection at a commercial garage, fleet leasing company, or similar facility. Name of Facility and Dates:

  _____

I certify the above information is true and accurate to the best of my knowledge.

Employee _____ _____

Signature of Mechanic/Inspector Date

Motor Carrier/Company _____ _____

Signature of Employer/Supervisor Date

Evidence of Inspector Qualifications are on file at:

_____

Bus Emergency Exits Inspection

VEHICLE IDENTIFICATION

MAKE	SERIAL NUMBER
YEAR	TIRE SIZE
COMPANY NUMBER/OTHER I.D.	OWNER, IF LEASED

OPERATION	Dates — Inspection Due Every 90 Days							
CHECK PUSHOUT WINDOWS								
EMERGENCY DOORS								
EMERGENCY DOOR LIGHTS								

On Guard

U.S. Department of Transportation

WITHIN AN INCH OF YOUR LIFE

IF BRAKE SLACK EXCEEDS ONE INCH, YOU COULD BE DRIVING A "KILLER TRUCK".

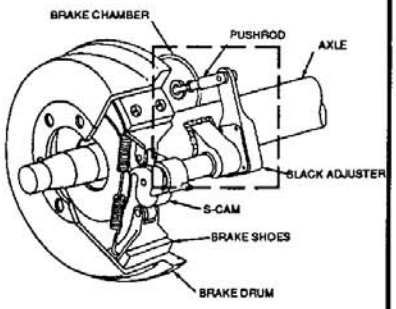

THIS IS THE MOST IMPORTANT INCH OF YOUR LIFE.

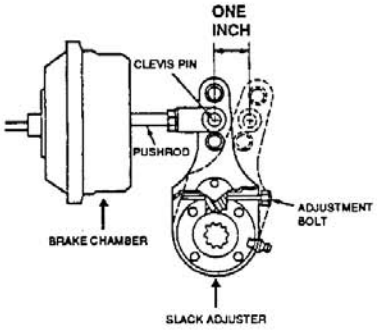

BRAKES SHOULD BE CHECKED BEFORE EACH TRIP AND MORE FREQUENTLY IN HILLY AREAS.

TRUCKERS! Poorly adjusted brakes could cost you time and money with out-of-service violations, jeopardize your safety and that of others due to impaired stopping ability, and even cost you your life. The only way to be sure that your vehicle's brakes are properly adjusted is to physically check each wheel on a regular schedule. It is difficult for you to sense, simply from pedal feel, that your brakes are out of adjustment. Under normal braking conditions, your brakes may respond satisfactorily, but under a *hard* or *panic* stop you may find that you are unable to stop in time.

HOW TO CHECK

Before checking or making adjustments, be sure that your vehicle is parked on a level surface with the wheels blocked, spring brakes released, and the engine shut off. The following measurements are for *Type 30 air chamber brakes only*. For other types, check with your mechanic, supervisor, or manufacturer.

One person method: (1) Pull the chamber pushrod to its limit by hand or by prying with a short pry bar. (2) Measure from the clevis pin to the chamber face at both full retraction and at full extension. The difference between these measurements is the pushrod travel or slack. One-half inch is correct, and the *MAXIMUM ALLOWABLE TRAVEL IS ONE INCH* (one-person method).

Two-person method: Make the same measurements described in the one-person method, but with brakes fully applied and with brakes released. Because of the considerable stretching and bending of various parts when using the two-person method, the *MAXIMUM ALLOWABLE TRAVEL IS TWO INCHES* for Type 30 air chamb.. brakes.

HOW TO ADJUST

Brake adjustment, or "taking up the slack," is done by first making sure the brakes are released, then turning the adjusting bolt on the slack adjuster arm: (1) Depress the spring locking sleeve with a wrench. (2) Tighten the bolt until solid resistance is met. This indicates that the brake linings are touching the drum.

NOTE: Most adjusting bolts require a normal clockwise turn to "set up" the brakes, but some require a counter-clockwise turn. Be alert for any outward movement of the chamber pushrod and slack adjuster arm while the adjustment bolt is being turned. This movement means you are turning in the wrong direction.

(3) Restore running clearance by backing off the adjustment between one-quarter and one-half a turn. Re-check the pushrod travel. Proper adjustment leaves one-half an inch. (4) Check each brake drum or rotor for excessive heat soon after the brakes have been adjusted. An extra-hot brake drum means that you have adjusted the brakes too tightly.

For both this type and other types of brake systems, always check with the manufacturer for proper maintenance and adjustment procedures. If you are not comfortable with these procedures, ask your mechanic or supervisor.